PROJECT:				DATE:	
DISTRIBUTOR:		CATALOGUE #:		TYPE:	
DRAWN BY:		CONTRACTOR:		PO:	



Choice

FLM
LED FLOOD LIGHT

STANPRO

SPEC SHEET

CCT AND POWER SELECTABLE INTEGRATED PHOTOCELL[1]

FEATURES AND SPECIFICATIONS

CONSTRUCTION

Physical Characteristics

- Die-cast aluminum housing available in a black finish.
- CCT and power select switches are located at the back of the housing.
- ON/OFF integrated photocell that can be easily disabled available on the 60 W, 100 W and 150 W models.

Mounting

- A 1/2" NPT knuckle mount is installed on the 25 W and 60 W models and includes a yoke mount bracket and a wall mount plate.
- A slipfitter mount (inner ø 2.44") is installed on the 100 W and 150 W models and includes a yoke mount bracket.

Lens/Optic

- Each model comes with a tempered glass lens available in a nema distribution 7Hx6V

PERFORMANCE DATA

- Available in 3 000/4 000/5 000 K selectable color temperature
- 80+ CRI
- Electrical ratings: 120-347 V
- Estimated life of over 50 000 hours to L70
- 0-10 V dimming standard
- 2.5 kV surge protection for 25 W and 60 W models and 6 kV surge protection for 100 W and 150 W models.
- Operating temperature: -40 °C to 50 °C (-40 °F to 122 °F)

COMPLIANCES

- cULus listed for wet locations
- Meets requirements of ICES-005 issue 5 class B for use in residential applications
- BC Hydro
- IP65
- IK07
- DLC Premium



Not all products are qualified on the DLC QPL. To view our DLC qualified products, please consult the DLC Qualified Products List at www.designlights.org/search.

[1] Integrated photocell on certain configurations.
Consult Quick ship and technical specification table for more details.

V: 11-16-2026

Data is based upon tests performed in a controlled environment. Actual performance can vary depending on operating conditions. All products are subject to change or may be discontinued any time without notice. Please contact your Stanpro customer service representative to confirm inventory levels at time of order.

QUICK SHIP AND TECHNICAL SPECIFICATION TABLE

Type	Order Code	Model Number	Watts (W)	Volts (V AC)	Color Temp. (K)[1]	Lumen Output (lm)[2, 3]	Efficiency (lm/W)	EPA (ft²)	LED Current	Photocell (Yes/No)	PF	THD (%)	Master Case QTY
	CCT and Power Selectable with Integrated Photocell[4]												
	69925	FLM-PS25B-Q-3C-BK/CHOICE	15/25	120-347	3 000/4 000/5 000	3 396	136	0.18	0.25	No	≥0.87	≤25	10
	69926	FLM-PS60B-Q-3C-BK-P/CHOICE	35/60	120-347	3 000/4 000/5 000	8 453	141	0.42	0.6	Yes	≥0.87	≤25	10
	69927	FLM-PS100B-Q-3C-BK-P/CHOICE	60/80/100	120-347	3 000/4 000/5 000	15 806	158	0.6	1	Yes	≥0.87	≤25	5
	69928	FLM-PS150B-Q-3C-BK-P/CHOICE	100/120/150	120-347	3 000/4 000/5 000	23 258	155	0.6	1.5	Yes	≥0.87	≤25	5

[1] Typical color temperature range: +/- 5 %.
[2] Lumen values are derived from photometric testing. Initial lumens range: +/- 10 %.
[3] Lumen values are based on 4 000 K default programming. Please refer to the LUMEN SPECIFICATION TABLE for more details on other color temperatures.
[4] Integrated ON/OFF photocell that can be easily disabled on selected models.

LUMEN SPECIFICATION TABLE

Order Code	Model Number	Watts (W)	LED Current (mA)	3 000 K		4 000 K		5 000 K		Default Programming
				Lumen Output (lm)	Efficacy (lm/W)	Lumen Output (lm)	Efficacy (lm/W)	Lumen Output (lm)	Efficacy (lm/W)	
69925	FLM-PS25B-Q-3C-BK/CHOICE	15 25	55 92	1 964 2 910	131 116	2 126 3 396	142 136	2 114 3 274	141 131	25 W / 4 000 K
69926	FLM-PS60B-Q-3C-BK-P/CHOICE	35 60	38 65	5 163 7 657	148 128	5 534 8 453	158 141	5 595 8 447	160 141	60 W / 4 000 K
69927	FLM-PS100B-Q-3C-BK-P/CHOICE	60 80 100	35 46 58	9 738 12 515 14 774	162 156 148	10 188 13 435 15 806	170 168 158	10 185 13 214 15 162	170 165 152	100 W / 4 000 K
69928	FLM-PS150B-Q-3C-BK-P/CHOICE	100 120 150	22 27 34	15 659 17 681 21 047	157 147 140	16 766 19 183 23 258	168 160 155	16 313 18 630 21 884	163 155 146	150 W / 4 000 K

DLC UNIQUE ID TABLE

Order Code	Model Number	DLC Premium Unique ID[1]
69925	FLM-PS25B-Q-3C-BK/CHOICE	S-2B5GBF
69926	FLM-PS60B-Q-3C-BK-P/CHOICE	S-0XLZDK
69927	FLM-PS100B-Q-3C-BK-P/CHOICE	S-LDP59Y
69928	FLM-PS150B-Q-3C-BK-P/CHOICE	S-HTYX2H

[1] Primary Use Designation: Architectural Flood and Spot Luminaires.

EPA

Mounting Type	Fixture Tilt	Power	Single	2 @ 180°	2 @ 90°	3 @ 90°	4 @ 90°
Slipfitter	45°	100 W	0.68 ft²	1.32 ft²	1.32 ft²	2.04 ft²	2.72 ft²
		150 W	0.94 ft²	1.88 ft²	1.88 ft²	2.82 ft²	3.76 ft²
	60°	100 W	0.54 ft²	1.08 ft²	1.08 ft²	1.62 ft²	2.16 ft²
		150 W	0.70 ft²	1.40 ft²	1.40 ft²	2.10 ft²	2.80 ft²

COMPATIBLE DIMMERS[1]

Brand	Model
Leviton	DS710, DD710, AWSMT-7DW
Legrand	RH4FBL3PW, WS4FBL3P
Lutron	NFTV, NTSTV, DVTV

Dimming range : 0 %-100 %

[1] This table shows dimmers that have been tested and have demonstrated proper operation under normal conditions. Each installation being unique, various factors such as load, common neutrals or other electrical products on the circuit can, in certain instances, cause variance in system performance. Read and comply to the dimmer installation instructions. Consult dimming system manufacturer for additional support in operation. Some dimmers may require more than one product for stable operation. Stanpro recommends to use dimmers designed to work with LED products. Older dimmers designed for incandescent products may cause erratic operation.



Wall mount plate[2]



Yoke mount

INCLUDED IN THE BOX

[1] Included with 25 W and 60 W models only

V: 11-16-2026

Data is based upon tests performed in a controlled environment. Actual performance can vary depending on operating conditions. All products are subject to change or may be discontinued any time without notice. Please contact your Stanpro customer service representative to confirm inventory levels at time of order.

DIMENSIONS AND WEIGHTS

KNUCKLE MOUNT

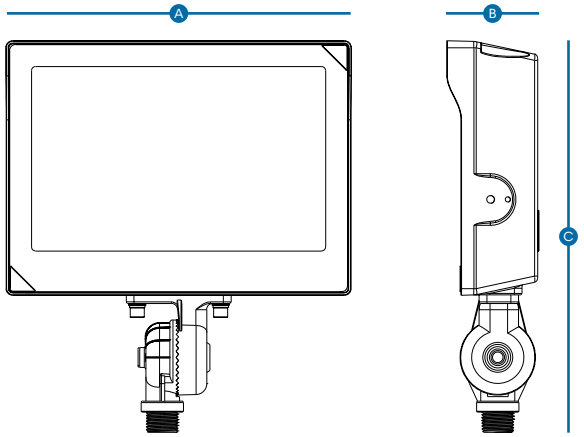

Type	A	B	C	Net Weight (lbs)
25 W	5.82" (14.80 cm)	2" (5.10 cm)	7.67" (19.50 cm)	2.42
60 W	8.7" (22.10 cm)	2.28" (5.80 cm)	9.84" (25 cm)	3.43

YOKE MOUNT

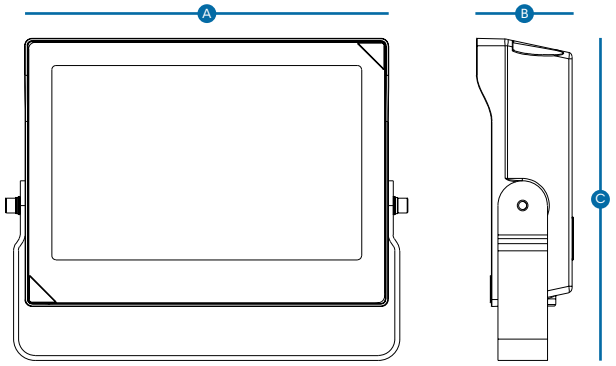

Type	A	B	C	Net Weight (lbs)
25 W	6.18" (15.70 cm)	2" (5.10 cm)	5.27" (13.40 cm)	2.11
60 W	9.21" (23.40 cm)	2.28" (5.80 cm)	7.67" (19.50 cm)	3.77
100 W	10.35" (26.75 cm)	2.8" (7.10 cm)	7.5" (19.15 cm)	6.83
150 W	11.5" (29.15 cm)	2.88" (7.33 cm)	8.38" (21.15 cm)	8.82

SLIPFITTER

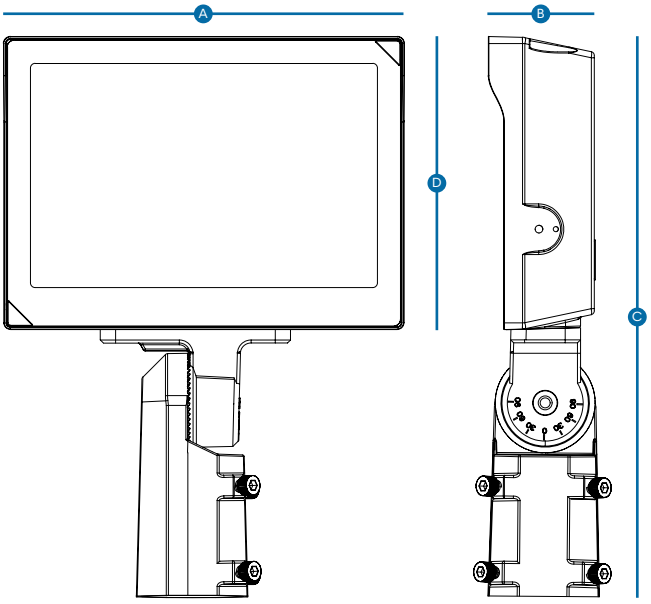

Type	A	B	C	D	Net Weight (lbs)
100 W	10.3" (26.70 cm)	2.8" (7.10 cm)	14.6" (37.10 cm)	7.72" (19.60 cm)	8.82
150 W	10.3" (26.70 cm)	2.8" (7.10 cm)	14.6" (37.10 cm)	7.72" (19.60 cm)	10.58

V: 11-16-2026

Data is based upon tests performed in a controlled environment. Actual performance can vary depending on operating conditions. All products are subject to change or may be discontinued any time without notice. Please contact your Stanpro customer service representative to confirm inventory levels at time of order.