STANPRO

Project: _____ Type: _____

Drawn by: _____ Catalogue #: _____ Date: _____

*Series Spec Sheet*

# GIMBAL HIGH OUTPUT

## LED DOWNLIGHT 3.5"

Single CCT and 5 CCT selectable

The LED Gimbal high output downlight combines a sleek design with a small aperture without any compromise to the light output. Choose between single color temperature 3 000-2 200, 3 000 and 4 000 K or integrated 2 700/3 000/3 500/4 000/5 000 K selectable temperature. This series is perfect for both residential and commercial applications. This downlight is also available in bulk packs of 10 units, perfect for contractor projects!












### FEATURES AND SPECIFICATIONS

- **Construction**

  Physical Characteristics
  - Trim finish white, black and brushed nickel
  - Die cast aluminum housing
  - Available in 3.5" round and square
  - 24° tilt
  - 40° beam angle
  - Clear polycarbonate
  - CCT selectable switch is discretely placed on the back of the LED module
  - Includes an FT6 rated cable with DC 2.1 connector between driver and fixture that is approved for use in plenums and suspended ceilings

  Mounting
  - LED module with LED driver easily installs with included quick connect wire
  - Torsion spring mounting clips
  - Cutting hole 3 1/2" (9.0 cm) to 4 1/4" (10.8 cm) for the round version
  - Can cover a retrofit application cutting hole
  - Cutting hole 3 1/2" (9.0 cm) for the square version

- **Performance data**
  - Available in both 3 000-2 200, 3 000 and 4 000 K single color temperature, or 2 700/3 000/3 500/4 000/5 000 K selectable color temperature
  - 90+ CRI
  - 120 V
  - 120-277 V only available with bulk pack option
  - Estimated lifespan of 50 000 hours to L70
  - Phase cut (ELV / Triac) dimming standard
  - 0-10 V dimming standard only available with bulk pack option
  - Operating temperature: -30 °C to 45 °C (-22 °F to 113 °F)

- **Compliances**
  - cETLus listed for wet locations
  - Meets requirements of ICES-005 issue 5 class B for use in residential applications
  - IC rated for direct contact with insulation
  - Airtight as per ASTM E283 standard

### OVERVIEW

| | |
|---|---|
| **Light source** | LED |
| **Watts (W)** | 12 |
| **Lumen output (lm)** | 672 - 1 095 |
| **Efficacy (lm/W)** | 56 - 91 |
| **Color temperature (K)** | 3 000-2 200, 3 000, 4 000, 2 700/3 000/3 500/4 000/5 000 |
| **CRI** | 90+ |

5 yrs warranty

quick ship

LED fixture

dimmable fixture

warm dim

wet location

airtight

IC rated

ICES 005

c ETL US LISTED Intertek



2233 rue de l'Aviation, Dorval, QC H9P 2X6
514.342.1199, 1.800.361.6965 • 514.807.3011 • www.standardpro.com

STANPRO

## QUICK SHIP AND TECHNICAL SPECIFICATION TABLES

### Combined LED Module and LED Driver

| Order code | Model number | Watts (W) | Volts (V AC) | Color temp. (K)[1] | Lumen output (lm)[2] | Efficacy (lm/W) | CRI | Life L70 (hrs)[3] | Beam angle (°) | Cable rating | Finish | Shape | Power factor | THD (%) | Case qty (master) |
|---|---|---|---|---|---|---|---|---|---|---|---|---|---|---|---|
| **Single CCT** | | | | | | | | | | | | | | | |
| **67809** | DL/GIMBAL/RND/12W/30K/WH/STD | 12 | 120 | 3 000 | 920 | 77 | 90+ | 50 000 | 40 | FT6 | White | Round | >0.9 | <20 | 24 |
| **67810** | DL/GIMBAL/RND/12W/30K/BN/STD | 12 | 120 | 3 000 | 920 | 77 | 90+ | 50 000 | 40 | FT6 | Brushed Nickel | Round | >0.9 | <20 | 24 |
| **67811** | DL/GIMBAL/RND/12W/30K/BK/STD | 12 | 120 | 3 000 | 920 | 77 | 90+ | 50 000 | 40 | FT6 | Black | Round | >0.9 | <20 | 24 |
| **67812** | DL/GIMBAL/RND/12W/40K/WH/STD | 12 | 120 | 4 000 | 950 | 79 | 90+ | 50 000 | 40 | FT6 | White | Round | >0.9 | <20 | 24 |
| **Warm Dim** | | | | | | | | | | | | | | | |
| **67813** | DL/GIMBAL/RND/12W/30-22K/WH/STD | 12 | 120 | 3 000-2 200 | 660 | 55 | 90+ | 50 000 | 40 | FT6 | White | Round | >0.9 | <20 | 24 |
| **CCT Selectable** | | | | | | | | | | | | | | | |
| **69017** | DL/GIMBAL/3.5IN/RND/12W/5C/BN | 12 | 120 | 2 700/3 000/3 500/4 000/5 000 | 850 | 71 | 90+ | 50 000 | 40 | FT6 | Brushed Nickel | Round | >0.9 | <20 | 24 |
| **69427** | DL/GIMBAL/3.5IN/SQR/12W/5C/WH | 12 | 120 | 2 700/3 000/3 500/4 000/5 000 | 850 | 71 | 90+ | 50 000 | 40 | FT6 | White | Square | >0.9 | <20 | 24 |

[1] Typical color temperature range: +/- 5 %.
[2] Lumen values are derived from photometric testing. Initial lumens range: +/- 10 %.
[3] Life hours are derived from IESNA LM-80 testing report and projected per IESNA TM-21 extrapolations.

### Bulk pack of 10 units

| Order code | Model number | Watts (W) | Volts (V AC) | Dimming type | Color temp. (K)[1] | Lumen output (lm)[2] | Efficacy (lm/W) | CRI | Life L70 (hrs)[3] | Beam angle (°) | Cable rating | Finish | Shape | Power factor | THD (%) | Pack qty |
|---|---|---|---|---|---|---|---|---|---|---|---|---|---|---|---|---|
| **LED Module** | | | | | | | | | | | | | | | | |
| **68208**[4] | DL/GIMBAL/RND/12W/30K/WH MODULE BULK | 12 | 120 | - | 3 000 | 920 | 77 | 90+ | 50 000 | 40 | FT6 | White | Round | >0.9 | <20 | 10 |
| **LED Driver** | | | | | | | | | | | | | | | | |
| **68209**[4] | GMB-DVR-12W BULK | 12 | 120 | ELV/Triac | - | - | - | - | 50 000 | - | FT6 | - | - | >0.9 | <20 | 10 |

[1] Typical color temperature range: +/- 5 %.
[2] Lumen values are derived from photometric testing. Initial lumens range: +/- 10 %.
[3] Life hours are derived from IESNA LM-80 testing report and projected per IESNA TM-21 extrapolations.
[4] 68208 must be purchased with 68209 or 69238 and cannot be used separately.

## LUMEN SPECIFICATION TABLE

| Order code | Model number | Watts | 3 000-2 200 K | | 2 700 K | | 3 000 K | | 3 500 K | | 4 000 K | | 5 000 K | |
|---|---|---|---|---|---|---|---|---|---|---|---|---|---|---|
| | | (W) | Lumen output (lm) | Efficacy (lm/W) | Lumen output (lm) | Efficacy (lm/W) | Lumen output (lm) | Efficacy (lm/W) | Lumen output (lm) | Efficacy (lm/W) | Lumen output (lm) | Efficacy (lm/W) | Lumen output (lm) | Efficacy (lm/W) |
| **67809** | DL/GIMBAL/RND/12W/30K/WH/STD | 12 | - | - | - | - | 966.6 | 80.6 | - | - | - | - | - | - |
| **67810** | DL/GIMBAL/RND/12W/30K/BN/STD | 12 | - | - | - | - | 991.7 | 82.6 | - | - | - | - | - | - |
| **67811** | DL/GIMBAL/RND/12W/30K/BK/STD | 12 | - | - | - | - | 982.9 | 81.9 | - | - | - | - | - | - |
| **67812** | DL/GIMBAL/RND/12W/40K/WH/STD | 12 | - | - | - | - | - | - | - | - | 985.5 | 82.1 | - | - |
| **67813** | DL/GIMBAL/RND/12W/30-22K/WH/STD | 12 | 672.9 | 56.1 | - | - | - | - | - | - | - | - | - | - |
| **69017** | DL/GIMBAL/3.5IN/RND/12W/5C/BN | 12 | - | - | 852.5 | 71 | 875.6 | 73 | 850.6 | 70.9 | 889.9 | 74.2 | 1 094.5 | 91.2 |
| **69427** | DL/GIMBAL/3.5IN/SQR/12W/5C/WH | 12 | - | - | 852.5 | 71 | 875.6 | 73 | 850.6 | 70.9 | 889.9 | 74.2 | 1 094.5 | 91.2 |

**DEFAULT PROGRAMMING**
**69017**: 2 700 K
**69427**: 2 700 K

**Data is based upon tests performed in a controlled environment. Actual performance can vary depending on operating conditions. All products are subject to change or may be discontinued any time without notice. Please contact your Stanpro customer service representative to confirm inventory levels at time of order.**


2233 rue de l'Aviation, Dorval, QC H9P 2X6
514.342.1199, 1.800.361.6965 • 514.807.3011 • www.standardpro.com

## ACCESSORIES (order separately)

| Order code | Model number | Type | Opening diameter (in) | Case qty (master) |
|---|---|---|---|---|
| **66049** | ACC/MPLATE/3.625IN/SQR/STD | Square mounting plate | 3 5/8 | 96 |
| **66056** | ACC/MPLATE/3.625IN/ADJ/STD | Adjustable mounting plate | 3 5/8 | 96 |
| **66142** | ACC/3/VAPOR BARRIER/STD | Vapor barrier extender | 3 5/8 | 50 |
| **66820**[1] | ACC/MPLATE/3.625IN/HANG.BARS/STD | Mounting plate with hanger bars | 3 5/8 | 25 |
| **66964**[2] | LPDL/ACC/6FT/EXTCABLE/FT6/STD | 6' FT6 Extension cord | - | 96 |

[1] Includes brackets and screws.
[2] Compatible with the version that has a selectable CCT switch behind the LED module and the single CCT version.



## COMPATIBLE DIMMERS

| | 3 000 K | 4 000 K | 3 000-2 200 K | 2 700/3 000/3 500/4 000/5 000 K |
|---|---|---|---|---|
| **Brand** | **Model** | | | |
| **Cooper** | RRD-6NA, AAL06 | RRD-6NA, AAL06 | RRD-6NA, AAL06 | RRD-6NA, AAL06 |
| **Leviton** | IPL06, 6674, DSL06-1LZ, DDMX1 | IPL06, 6674, DSL06-1LZ, DDMX1 | IPE04-1LZ[1], IPL06, 6674, DSL06-1LZ, DDMX1 | IPE04-1LZ[1], IPL06[1], 6674, DSL06-1LZ[1], DDMX1, DSM10-1LZ |
| **Lutron** | PD-5NE[1], DVCL-153P[1], SELV-300P, PD-6WCL, CTCL-153P, DVCL-253P, AYCL-253P, DVRP-253P, MACL-153P | PD-5NE[1], DVCL-153P[1], SELV-300P[1], PD-6WCL, CTCL-153P, DVCL-253P, AYCL-253P, DVRP-253P, MACL-153P | PD-5NE[1], DVCL-153P[1], SELV-300P, PD-6WCL, CTCL-153P, DVCL-253P, AYCL-253P, DVRP-253P, MACL-153P | PD-5NE[1], DVCL-153P, PD-6WCL, CT-CL-153P, DVCL-253P, AYCL-253P[1] |

**Dimming range:** 5%-100%
[1] **Dimming range:** 10%-100%
This table shows dimmers that have been tested and have demonstrated proper operation under normal conditions. Each installation being unique, various factors such as load, common neutrals or other electrical products on the circuit can, in certain instances, cause variance in system performance. Read and comply to the dimmer installation instructions. Consult dimming system manufacturer for additional support in operation. Some dimmers may require more than one product for stable operation. Stanpro recommends to use dimmers designed to work with LED products. Older dimmers designed for incandescent products may cause erratic operation.

## DIMENSIONS AND WEIGHTS

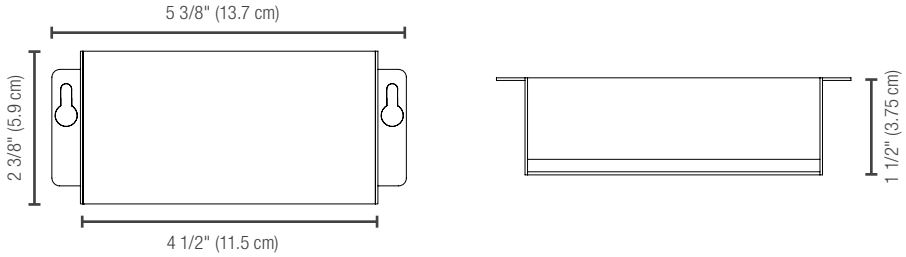


### ROUND VERSION

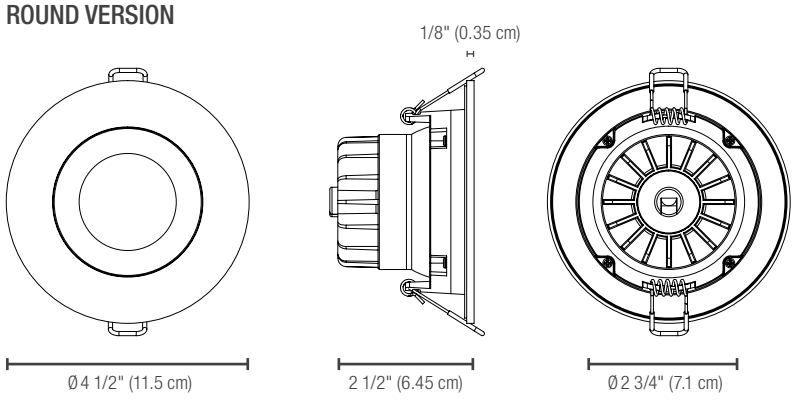




Ø 3 1/2" (9 cm) to 4 1/4" (10.8 cm)

### SQUARE VERSION

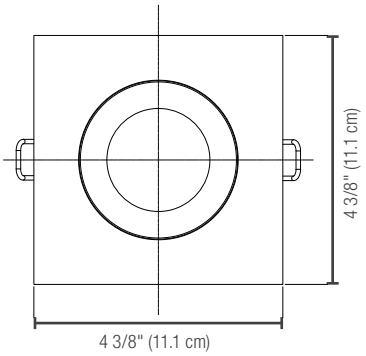




Ø 3 1/2" (9 cm)

| | Single CCT and CCT selectable |
|---|---|
| **Net weight (lbs)** | 1.18 |

**Data is based upon tests performed in a controlled environment. Actual performance can vary depending on operating conditions. All products are subject to change or may be discontinued any time without notice. Please contact your Stanpro customer service representative to confirm inventory levels at time of order.**


2233 rue de l'Aviation, Dorval, QC H9P 2X6
514.342.1199, 1.800.361.6965 • 514.807.3011 • www.standardpro.com

## PHOTOMETRIC DATA[1]

### 67809 • DL/GIMBAL/RND/12W/30K/WH/STD • 966.6 lm

#### Polar candela distribution

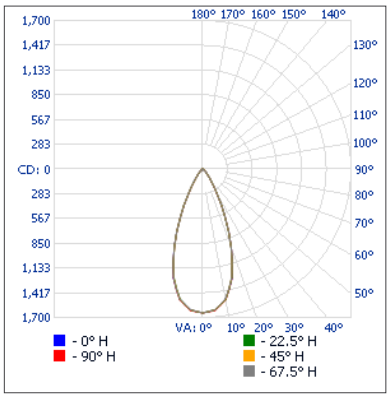


#### Zonal lumen summary

| Zone | Lumens | % Fixture |
|---|---|---|
| 0-30 | 777.5 | 80.4 |
| 0-40 | 894.2 | 92.5 |
| 0-60 | 955.5 | 98.9 |
| 60-90 | 11.1 | 1.1 |
| 70-100 | 3.5 | 0.4 |
| 90-120 | 0 | 0 |
| 0-90 | 966.6 | 100 |
| 90-180 | 0 | 0 |
| 0-180 | 966.6 | 100 |

#### Illuminance at a distance

| | Center beam fc | Beam width | |
|---|---|---|---|
| 1.7' | 570 | 1.4' | 1.4' |
| 3.3' | 151 | 2.7' | 2.6' |
| 5.0' | 65.8 | 4.0' | 4.0' |
| 6.7' | 36.7 | 5.4' | 5.4' |
| 8.3' | 23.9 | 6.7' | 6.7' |
| 10.0' | 16.5 | 8.0' | 8.0' |



Vert. spread: 43.8°
Horiz. spread: 43.7°

### 67812 • DL/GIMBAL/RND/12W/40K/WH/STD • 985.5 lm

#### Polar candela distribution

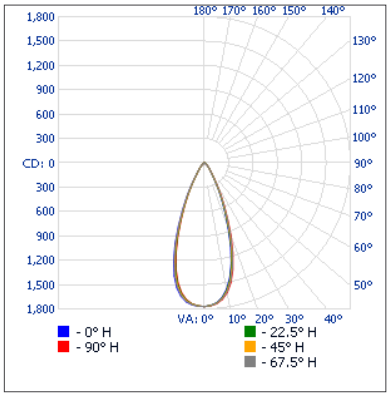


#### Zonal lumen summary

| Zone | Lumens | % Fixture |
|---|---|---|
| 0-30 | 796.1 | 80.8 |
| 0-40 | 903.3 | 91.7 |
| 0-60 | 972.3 | 98.7 |
| 60-90 | 13.2 | 1.3 |
| 0-90 | 985.5 | 100 |

#### Illuminance at a distance

| | Center beam fc | Beam width | |
|---|---|---|---|
| 1.7' | 612 | 1.3' | 1.3' |
| 3.3' | 162 | 2.5' | 2.5' |
| 5.0' | 70.8 | 3.8' | 3.8' |
| 6.7' | 39.4 | 5.1' | 5.1' |
| 8.3' | 25.7 | 6.3' | 6.3' |
| 10.0' | 17.7 | 7.6' | 7.6' |



Vert. spread: 41.7°
Horiz. spread: 41.8°

### 67813 • DL/GIMBAL/RND/12W/30-22K/WH/STD • 672.9 lm

#### Polar candela distribution

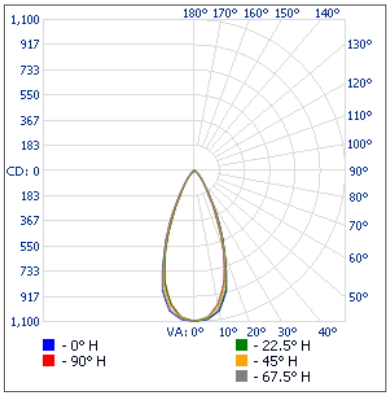


#### Zonal lumen summary

| Zone | Lumens | % Fixture |
|---|---|---|
| 0-30 | 521.2 | 77.4 |
| 0-40 | 608.0 | 90.3 |
| 0-60 | 661.9 | 98.4 |
| 60-90 | 11.1 | 1.6 |
| 70-100 | 3.2 | 0.5 |
| 90-120 | 0 | 0 |
| 0-90 | 672.9 | 100 |
| 90-180 | 0 | 0 |
| 0-180 | 672.9 | 100 |

#### Illuminance at a distance

| | Center beam fc | Beam width | |
|---|---|---|---|
| 1.7' | 379 | 1.4' | 1.3' |
| 3.3' | 101 | 2.7' | 2.6' |
| 5.0' | 43.8 | 4.1' | 3.9' |
| 6.7' | 24.4 | 5.5' | 5.3' |
| 8.3' | 15.9 | 6.8' | 6.5' |
| 10.0' | 10.9 | 8.2' | 7.9' |



Vert. spread: 44.7°
Horiz. spread: 42.9°

[1] Complete IES files available on our website.

**Data is based upon tests performed in a controlled environment. Actual performance can vary depending on operating conditions. All products are subject to change or may be discontinued any time without notice. Please contact your Stanpro customer service representative to confirm inventory levels at time of order.**



2233 rue de l'Aviation, Dorval, QC H9P 2X6
514.342.1199, 1.800.361.6965 • 514.807.3011 • www.standardpro.com

## PHOTOMETRIC DATA[1]

69427 • DL/GIMBAL/3.5IN/SQR/12W/5C/WH • 3 500 K • 850.6 lm

### Polar candela distribution

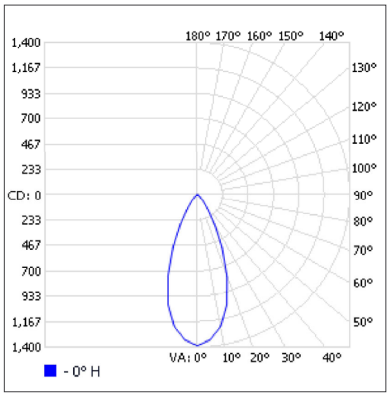


### Zonal lumen summary

| Zone | Lumens | % Fixture |
|---|---|---|
| 0-30 | 652.9 | 76.8 |
| 0-40 | 770.5 | 90.6 |
| 0-60 | 838.4 | 98.6 |
| 60-90 | 12.1 | 1.4 |
| 70-100 | 3.5 | 0.4 |
| 90-120 | 0 | 0 |
| 0-90 | 850.6 | 100 |
| 90-180 | 0 | 0 |
| 0-180 | 850.6 | 100 |

### Illuminance at a distance

| | Center beam fc | Beam width |
|---|---|---|
| 1.7' | 480 | 1.4' |
| 3.3' | 127 | 2.7' |
| 5.0' | 55.5 | 4.0' |
| 6.7' | 30.9 | 5.4' |
| 8.3' | 20.1 | 6.7' |
| 10.0' | 13.9 | 8.1' |

Vert. spread: 43.9°

[1] Complete IES files available on our website.

Data is based upon tests performed in a controlled environment. Actual performance can vary depending on operating conditions. All products are subject to change or may be discontinued any time without notice. Please contact your Stanpro customer service representative to confirm inventory levels at time of order.



2233 rue de l'Aviation, Dorval, QC H9P 2X6
514.342.1199, 1.800.361.6965 • 514.807.3011 • www.standardpro.com